Assembly Instructions

STB1803:160*200

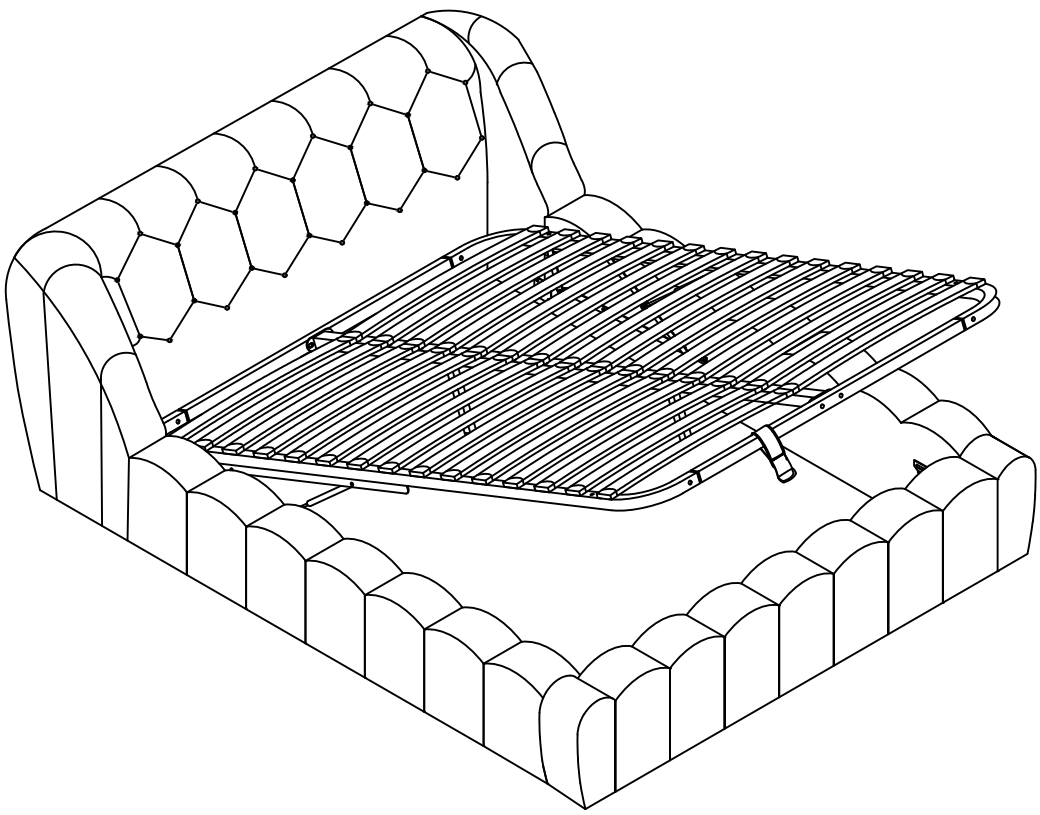

SAMPUR

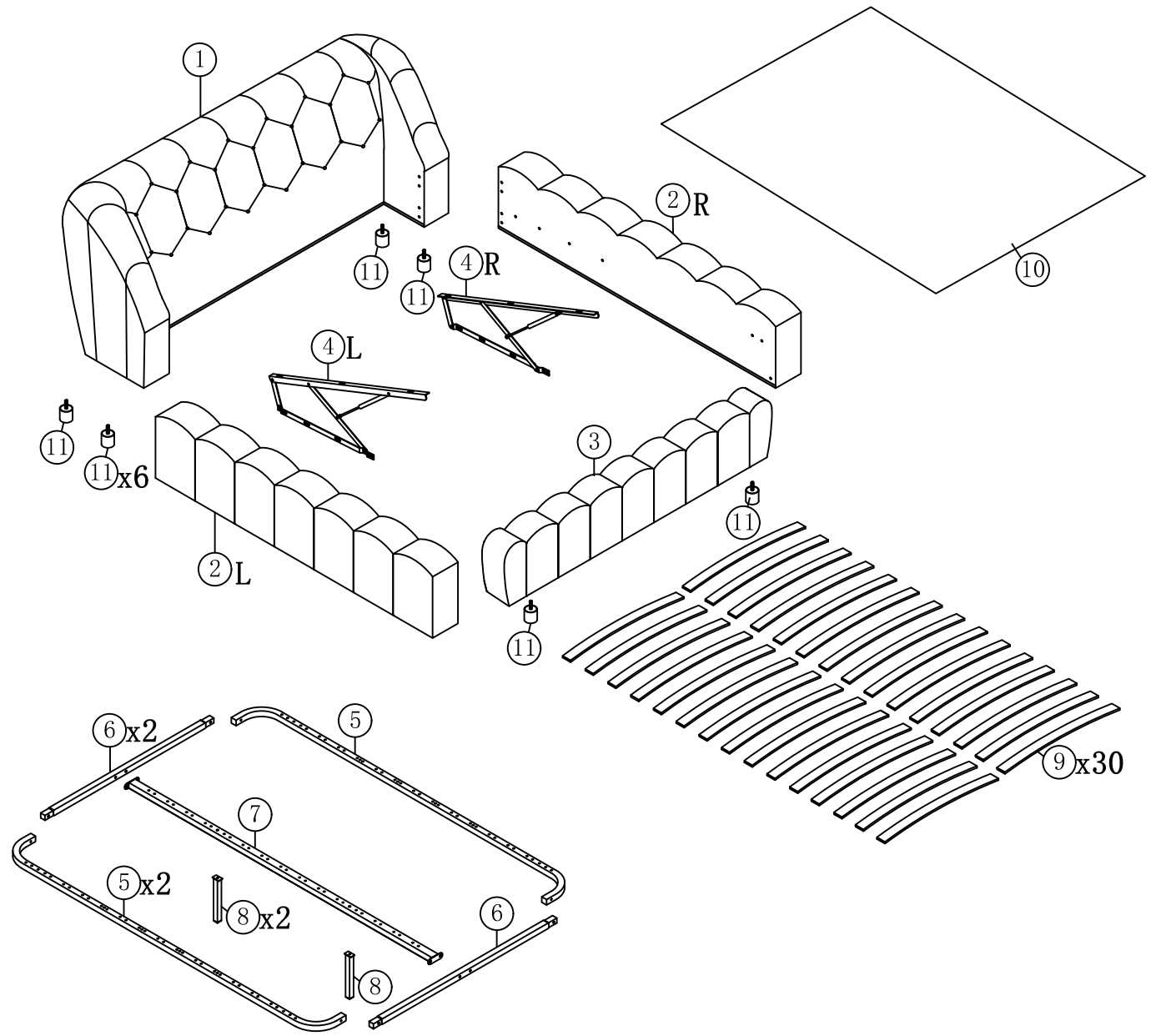

1x
A

36x
B

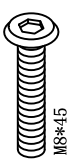

16x
C

14x
D

2x
E

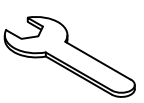

1x
F

2x
G

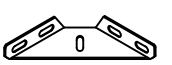

2x
H

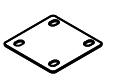

4x
I

1x
J

30x
K

15x
L

1

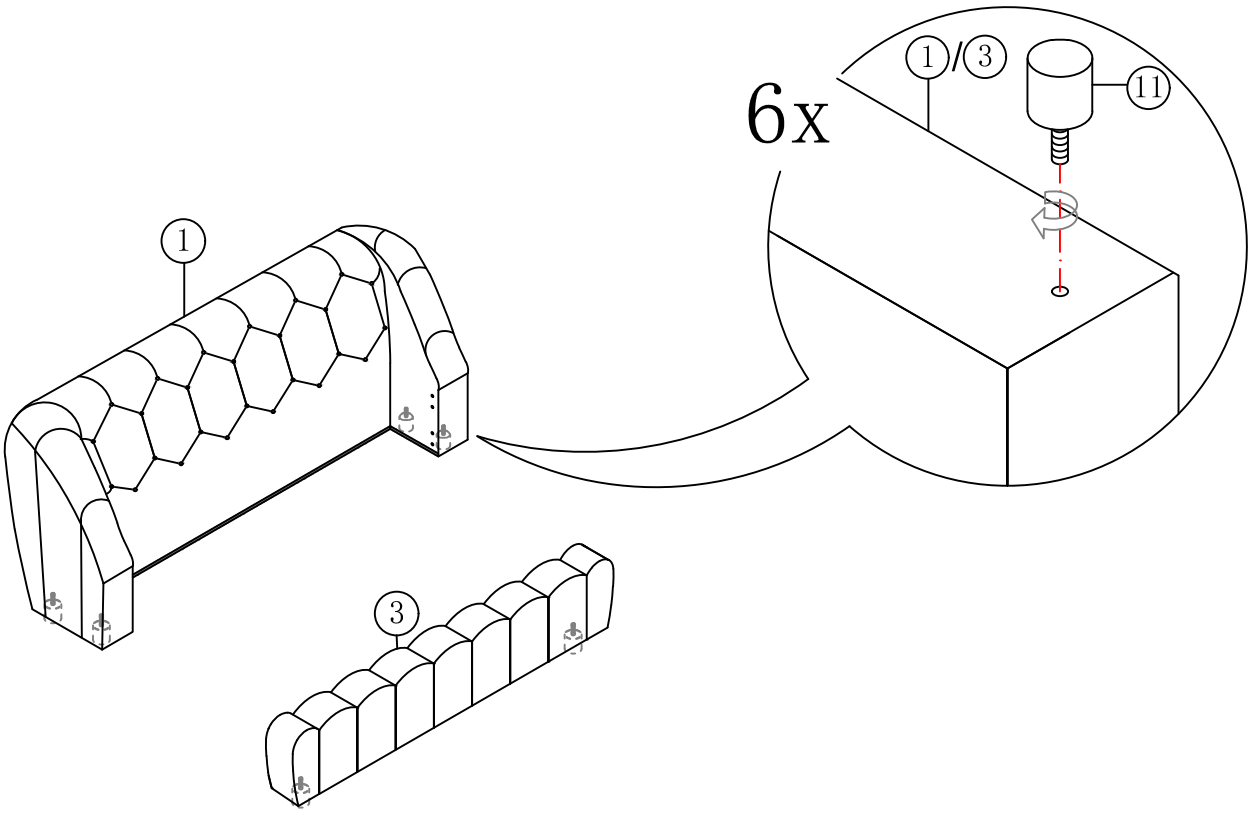

2

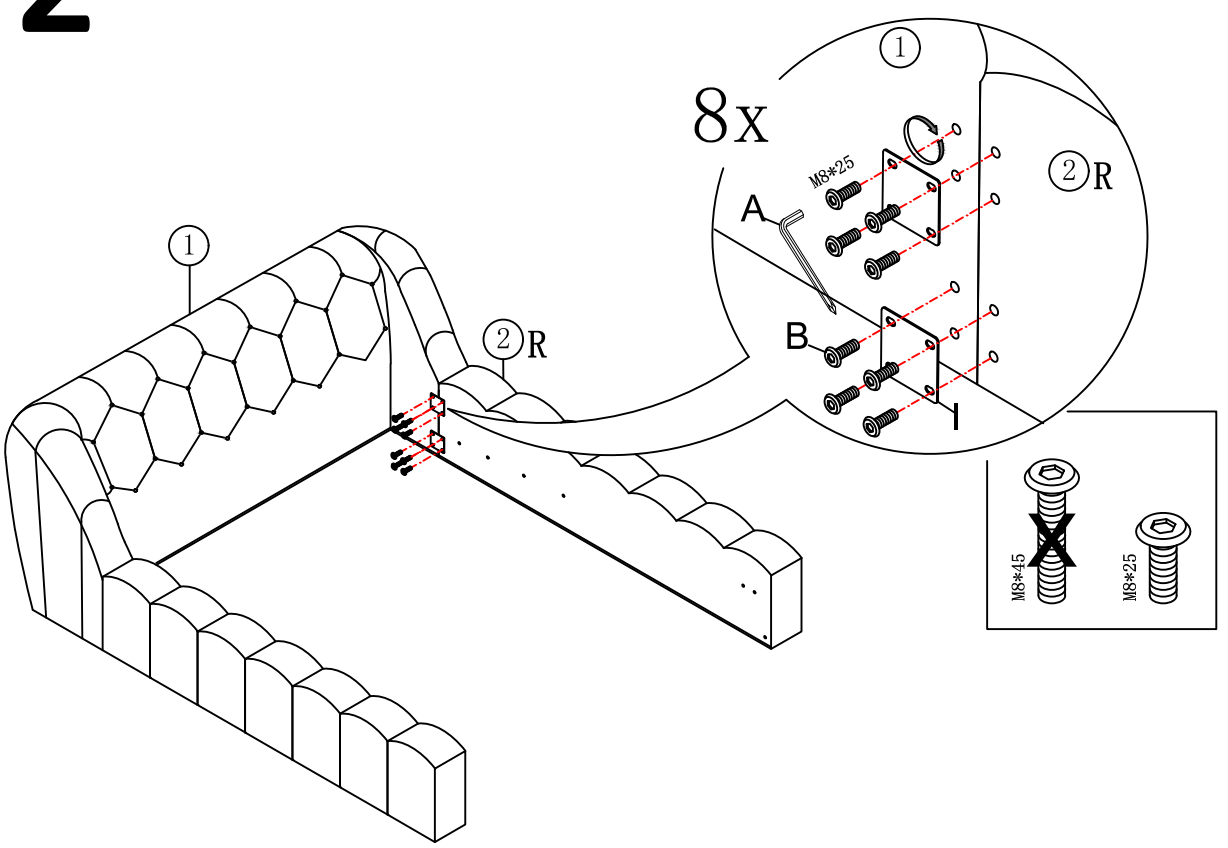

3

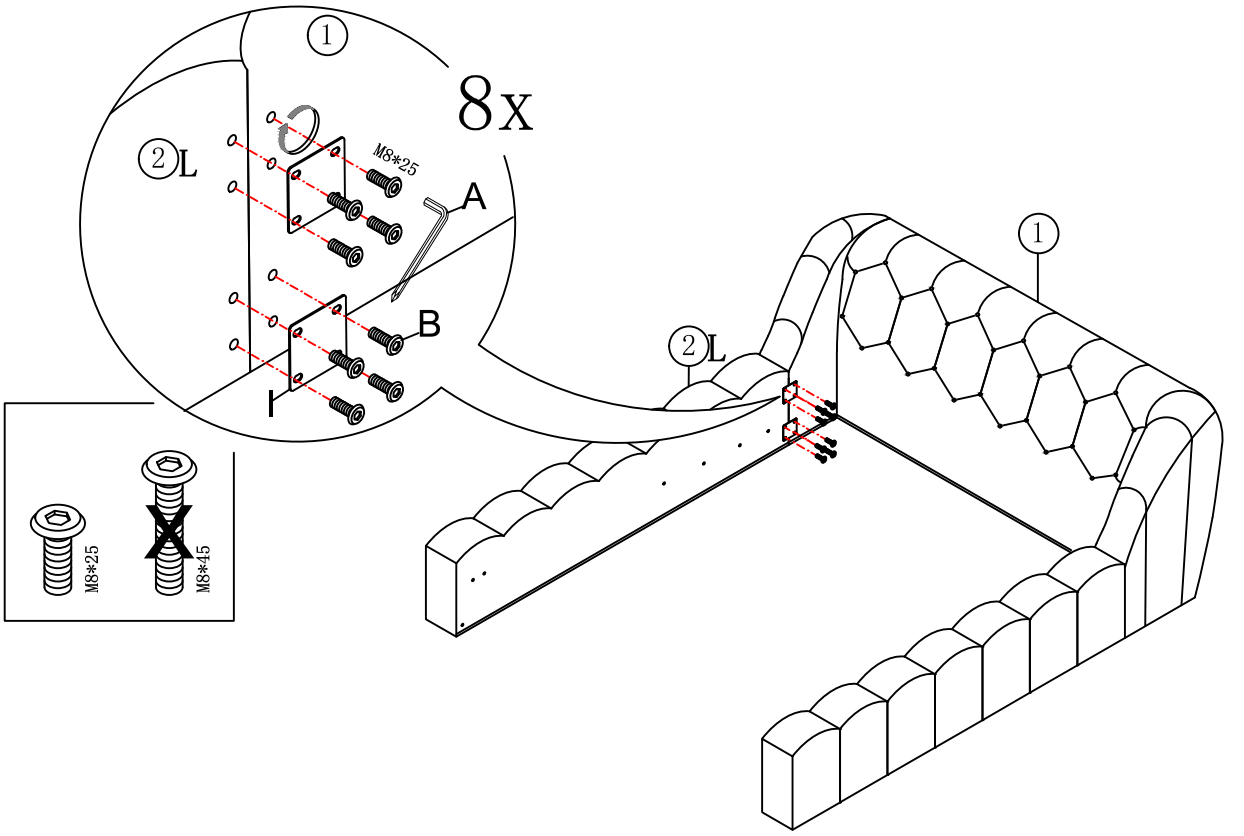

4

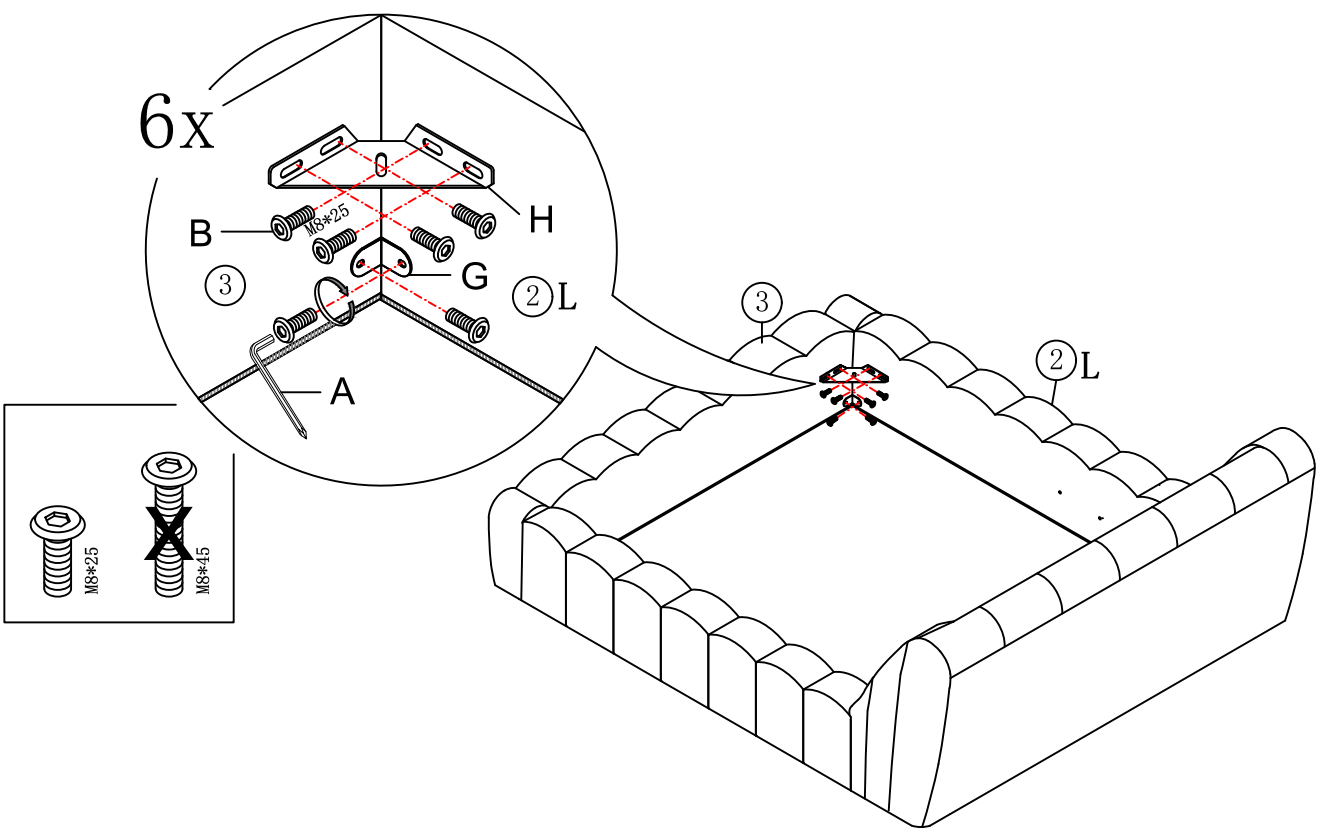

5

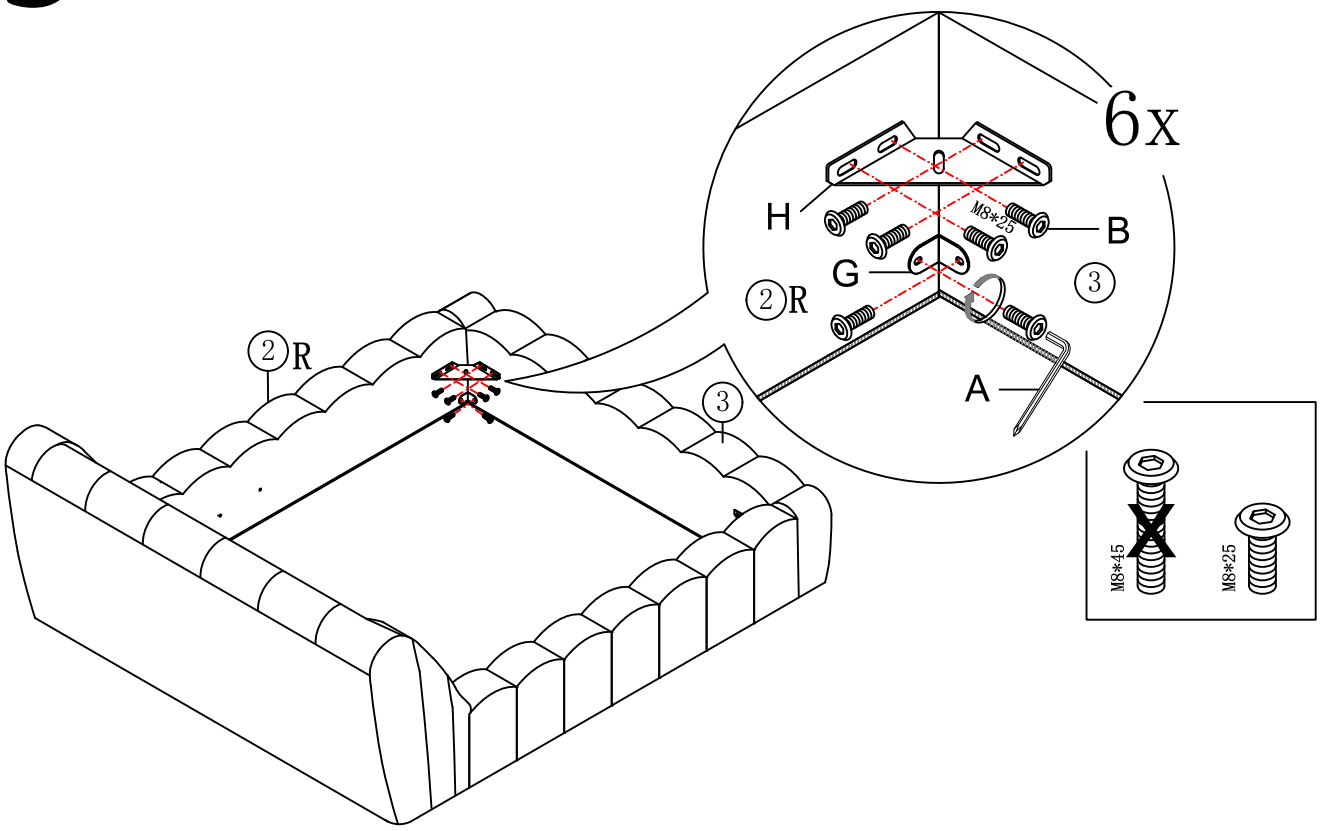
6x
H
M8*25
B
G
2 R
3
A
2 R
3
M8*45
M8*25

6

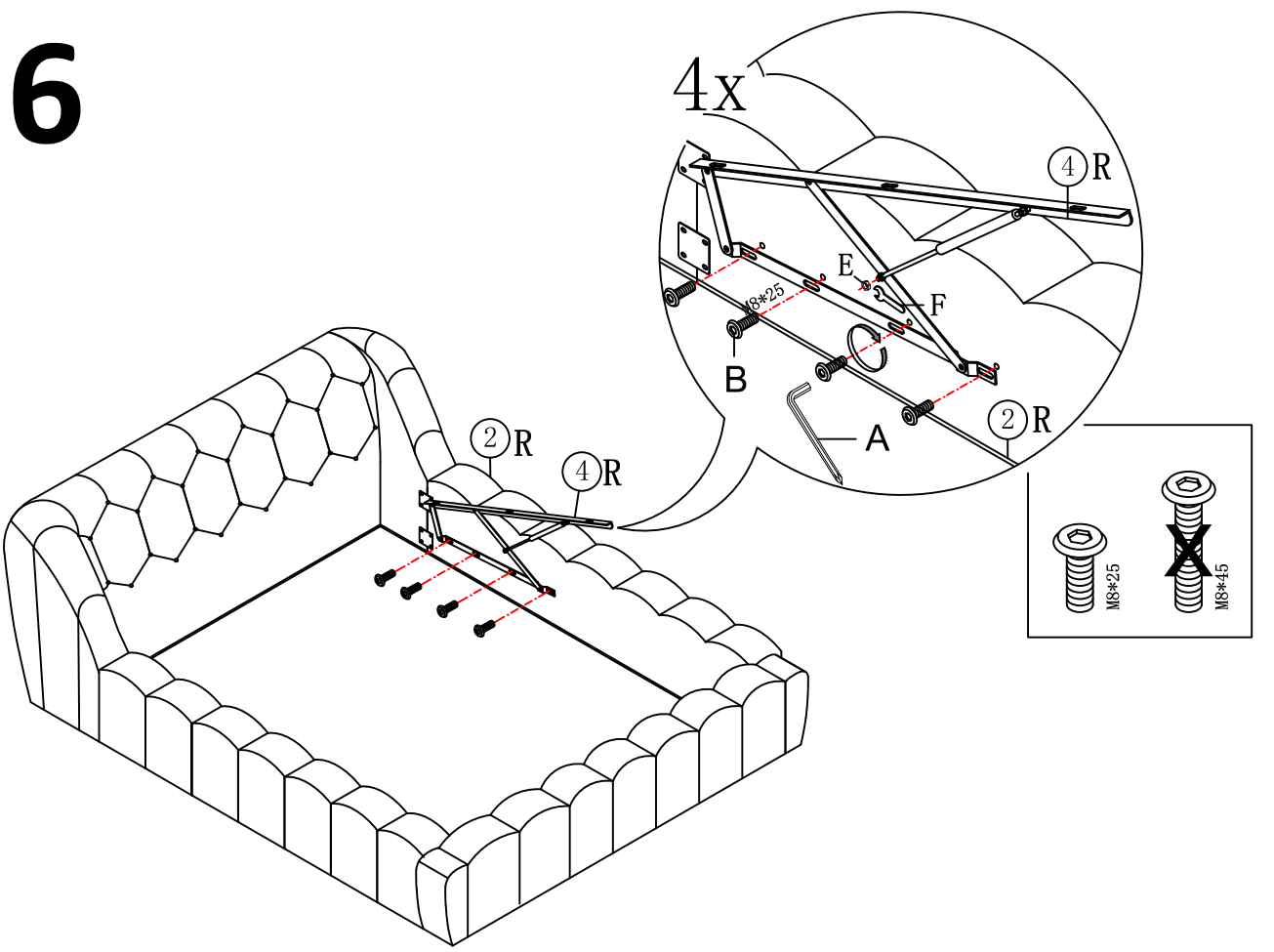
4x
4 R
E
F
M8*25
B
A
2 R
2 R
4 R
M8*25
M8*45

7

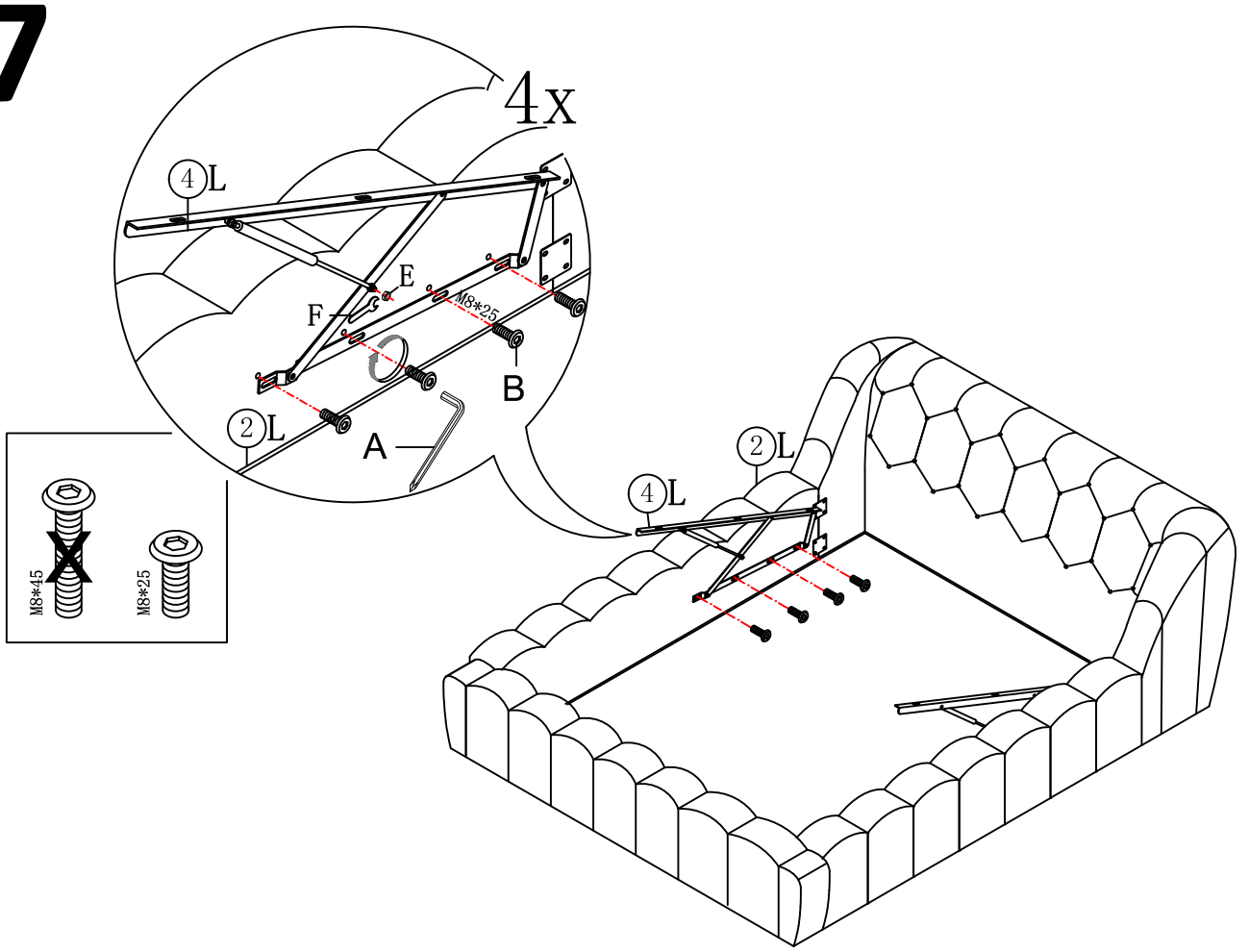

8

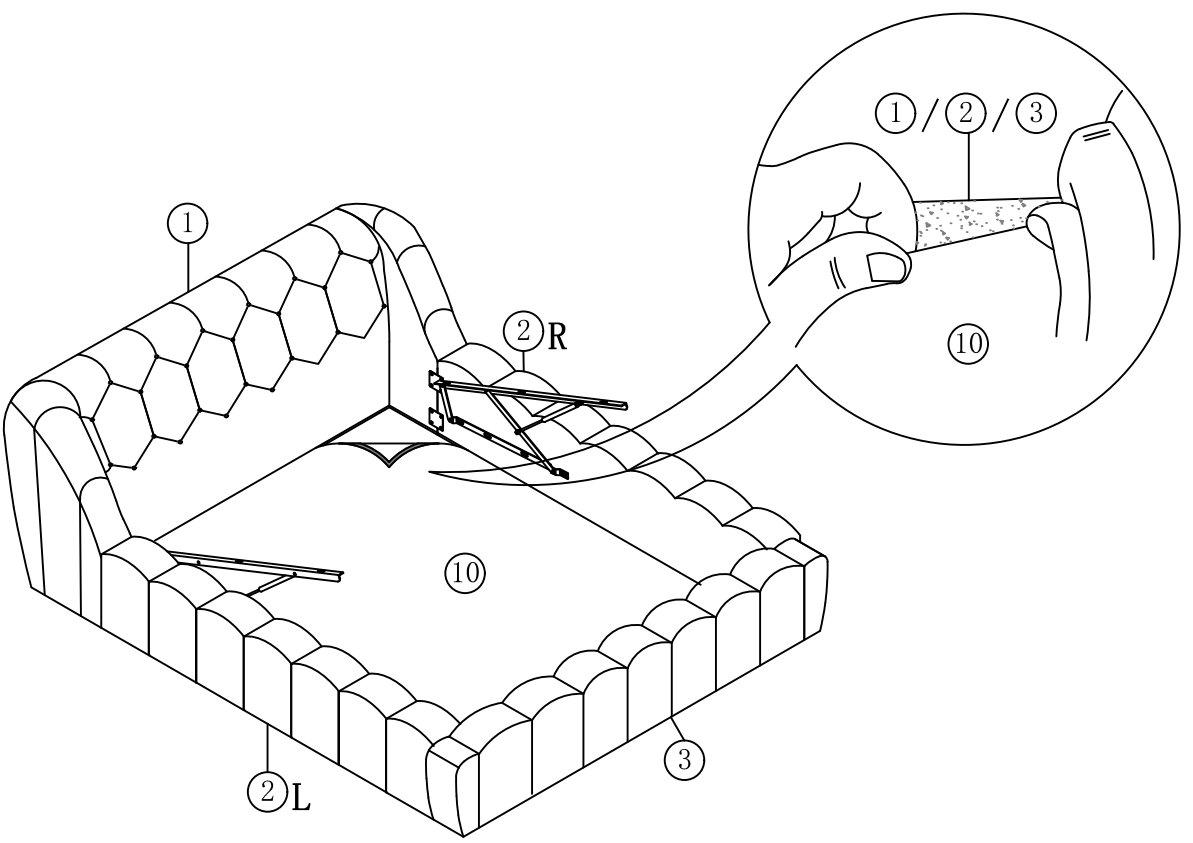

9

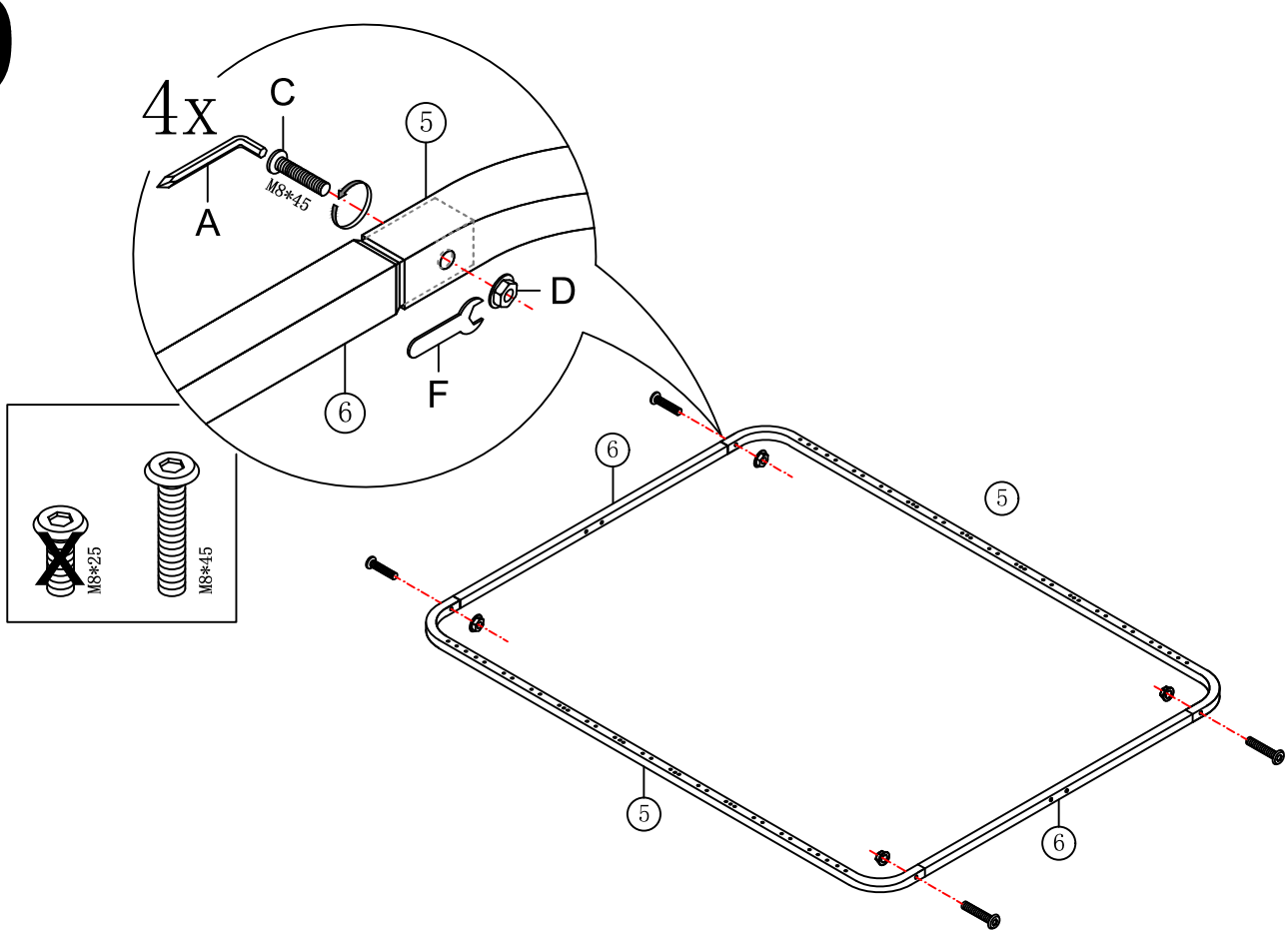

10

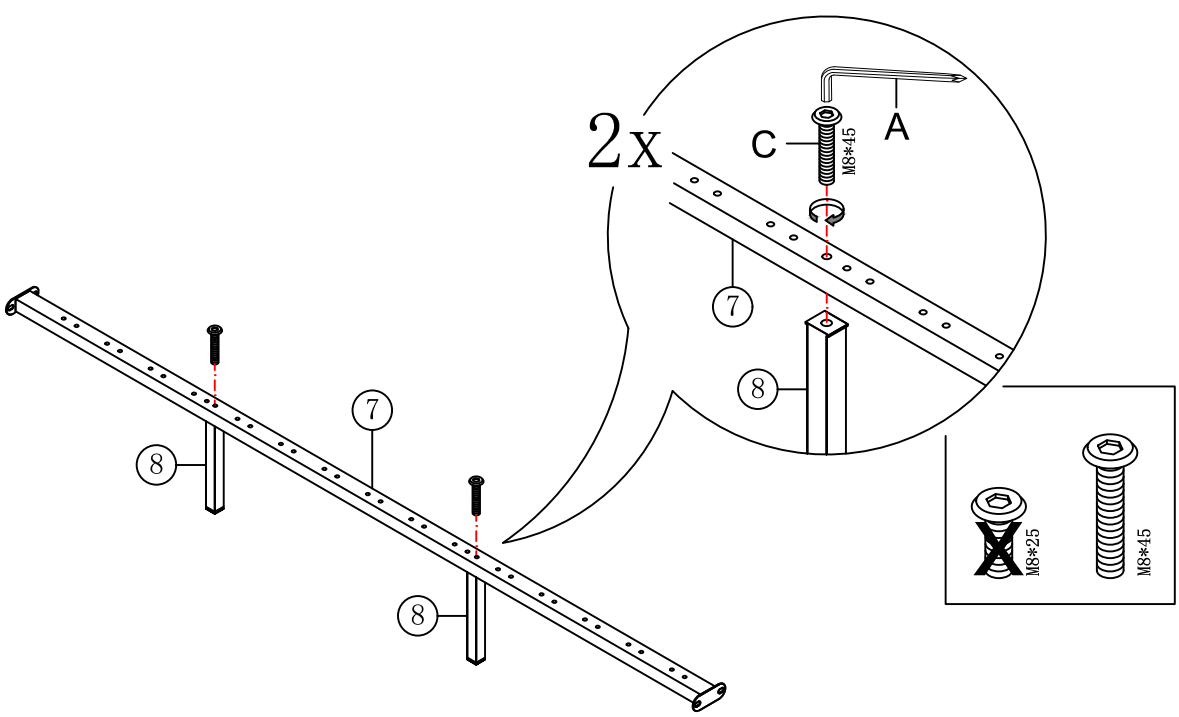

11

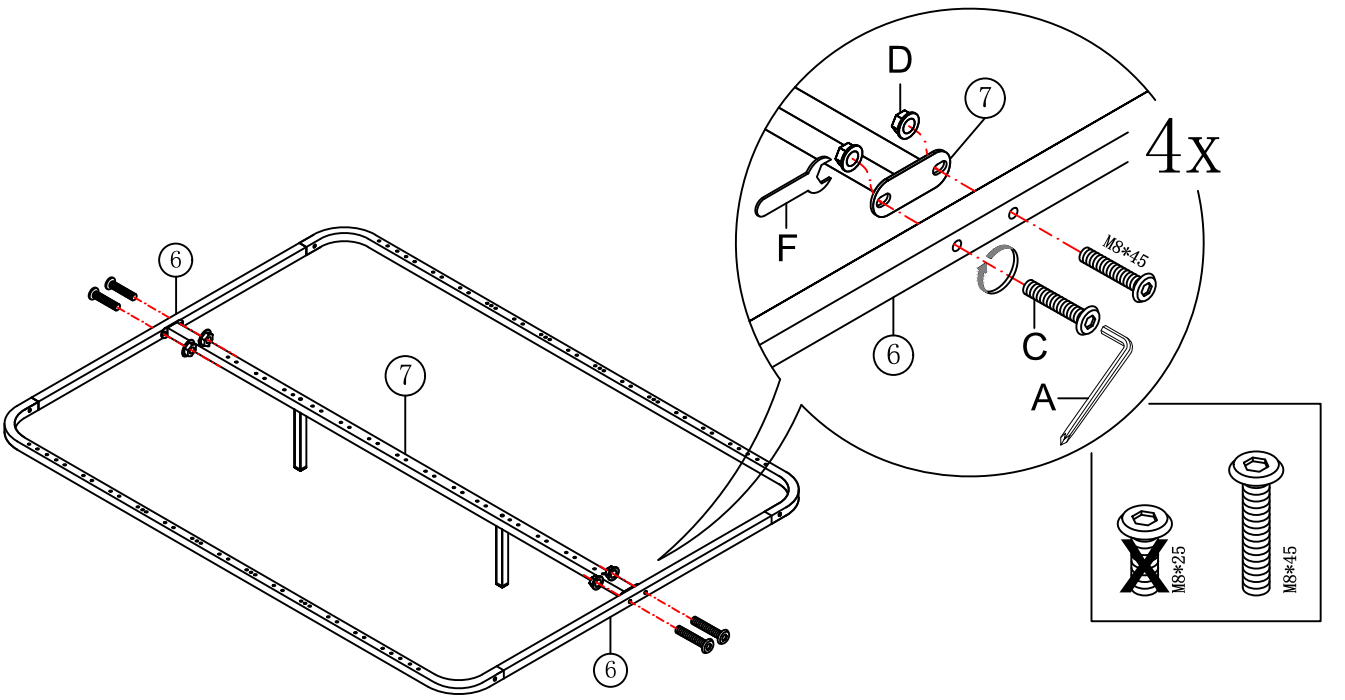
D
7
4x
F
M8*45
6
C
A
6
7
6
M8*25
M8*45

12

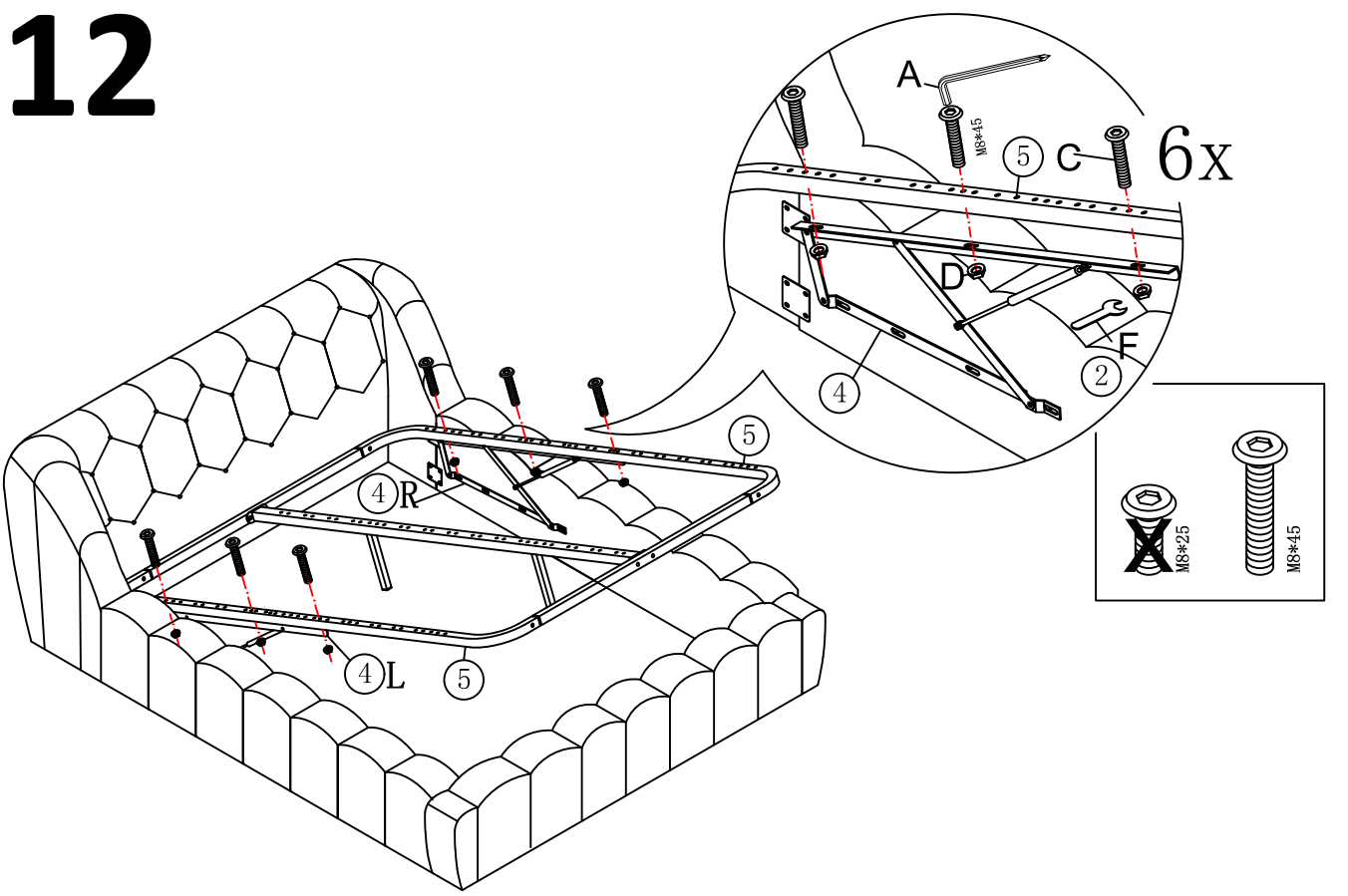
A
M8*45
5
C
6x
D
F
4
2
5
4R
4L
5
M8*25
M8*45

13

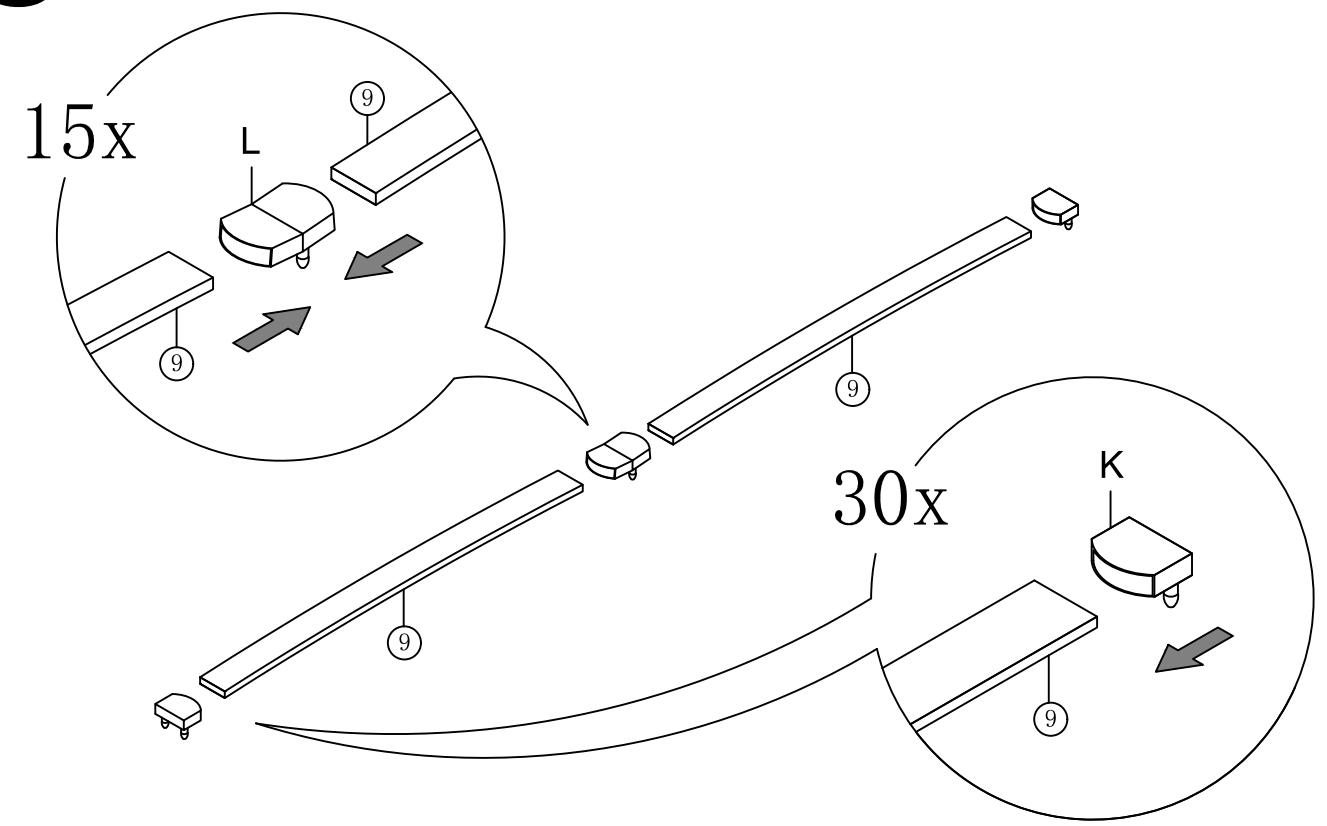

14

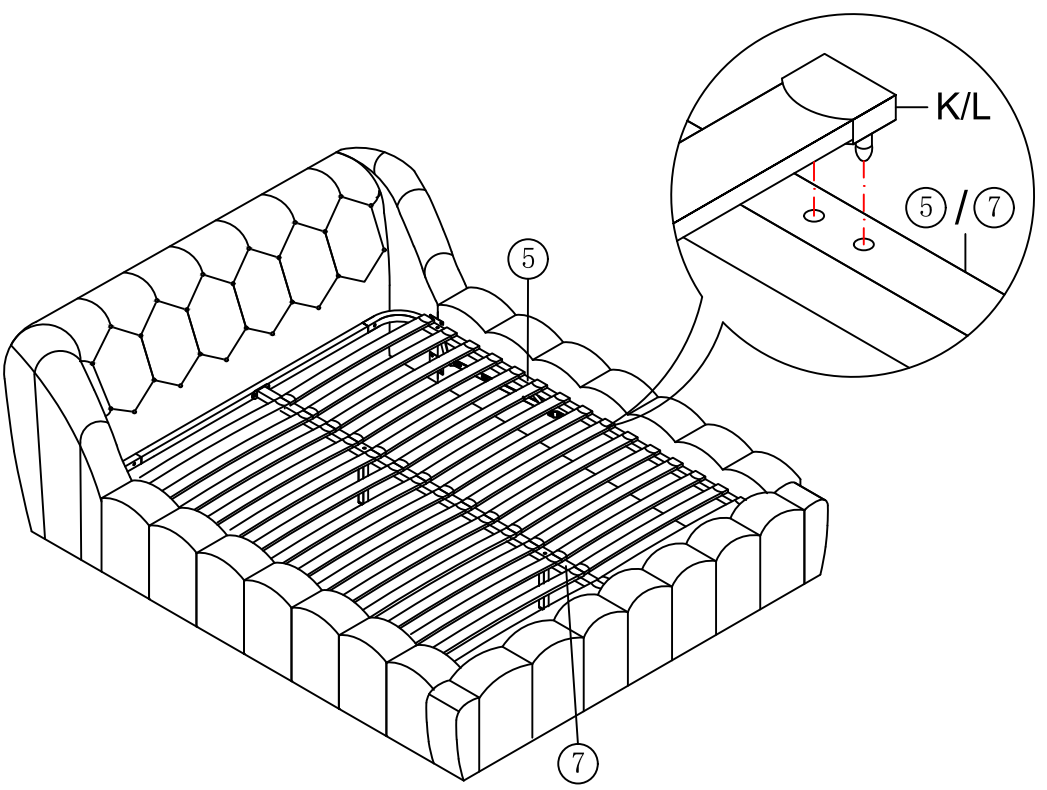

15

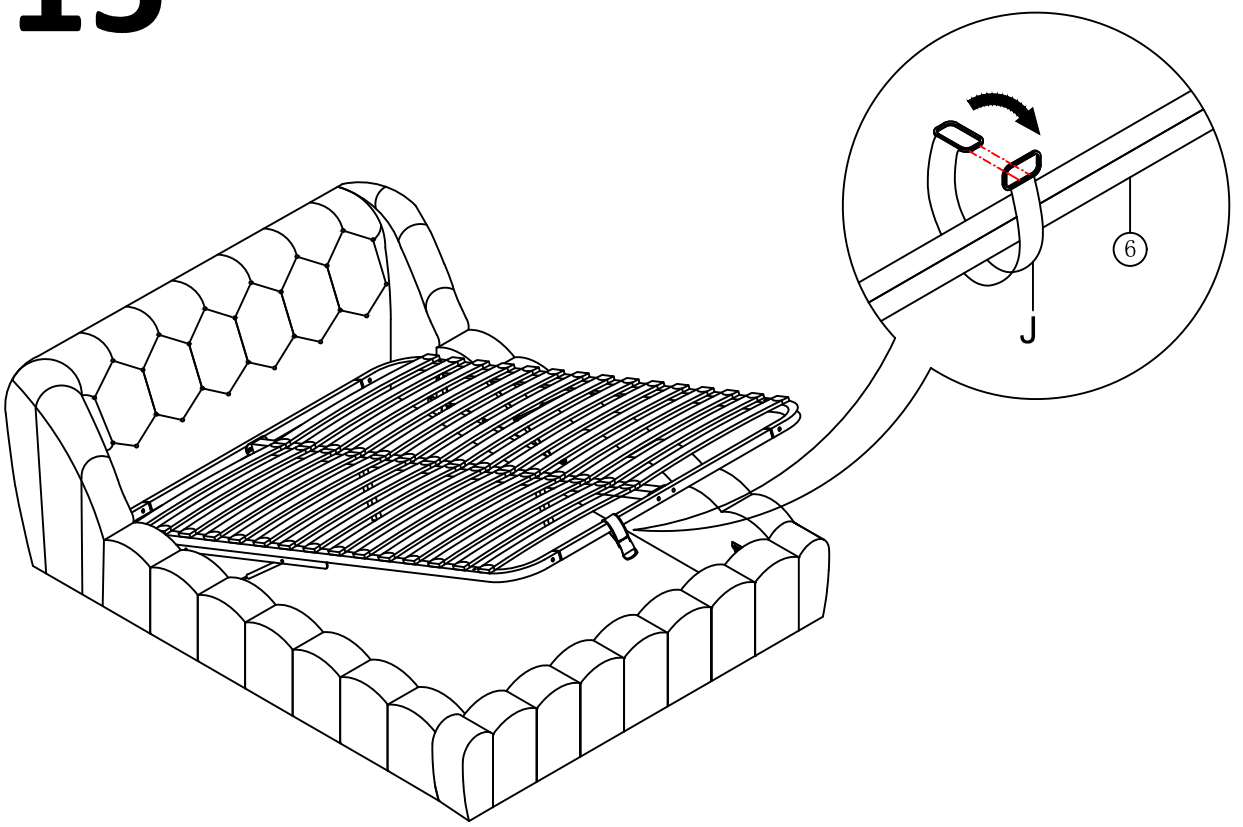
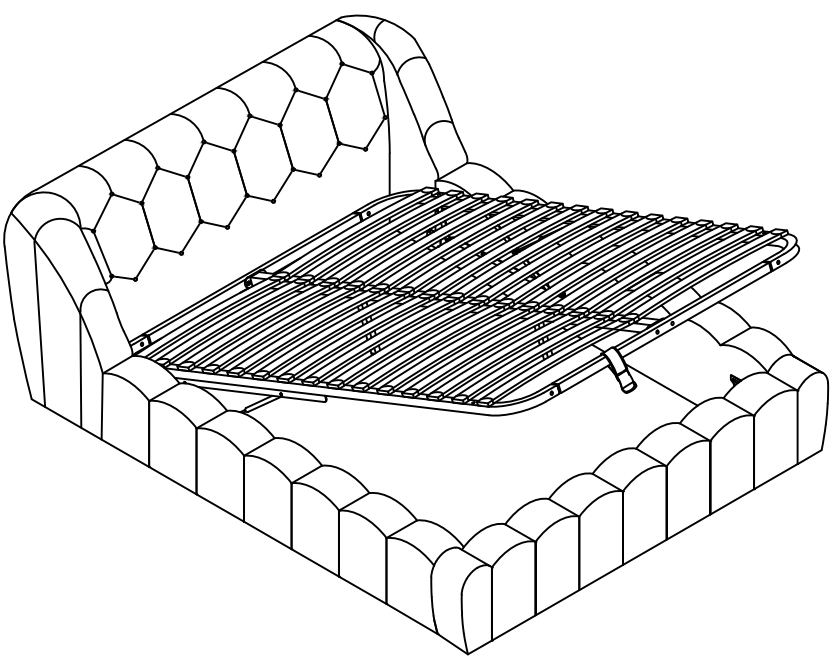
16